Innovation

eATMP

Electric All Terrain Mobility Platform

SPECIFICATION SHEET

The All Terrain Mobility Platform has now been in service in a broad range of applications around the world for nearly four decades. It's unrivalled cross country performance and 'go anywhere' ethos combined with a class leading payload and adaptability for different roles continues to attract new users and drive design evolution.

The ATMP has provided the base platform for a wide variety of emergency response and civilian applications including firefighting, air-crash recovery, ground surveying, beach patrol, airfield logistics support, maritime launch & recovery and utilities logistic support. It can be transported internally and underslung by a range of aircraft.

The latest versions of the base vehicle architecture add options for full electric and hybrid-electric propulsion to complement the conventional diesel variant, with exportable power and 'optional manning' capabilities for increasing autonomy of 'dull, dangerous or dirty tasks'.

Further advantages include reduced or zero emissions, silent operation, and the ability to transport, charge and enable the launch & docking of drones. The drivetrain architecture is adaptable to suit application-specific requirements.

A	Length	3443 mm
B	Width	1935 mm
C	Height (Including removable ROPS)	2152 mm
D	Track	1547 mm
E	Wheelbase to Axle 2	923 mm
F	Wheelbase to Axle 3	1846 mm
G	Load Length	1460 mm
H	Load Height	929 mm
I	Ground Clearance	226 mm
J	Approach Angle	45°
K	Departure Angle	45°

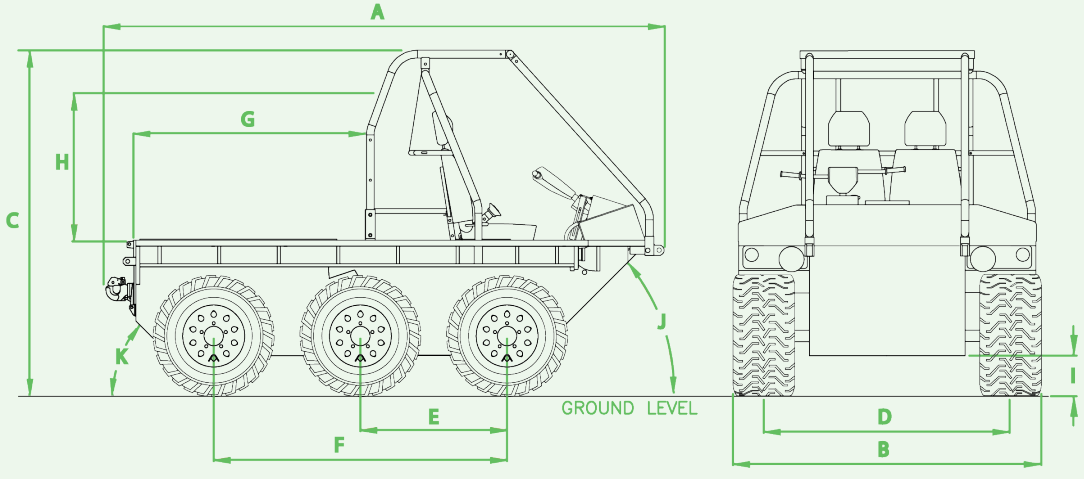

eATMP Vehicle Specification

Weight (GVW)	3500 kg
Payload*	1600 kg
Kerb weight*	1900 kg
Maximum speed*	60 km/h
Maximum road range*	850 km
Fording	600 mm
Gradient	45°
Side slope	40°

Propulsion options*

- Diesel 1.9l Turbo diesel engine
- Hybrid diesel/electric 1.5l Turbo diesel engine and generator
- Fully electric powering individually controlled axle mounted electric motors

Power	58 kW
Steering	Power assisted front four wheel steering plus skid steer
Brakes	Via axle mounted disc brakes (diesel powered variant) Via axle mounted electric motors plus disc brakes on front 2 axles (electric variant)
Tyres	31/15.5 R16
Electrical system	12/24V DC (all variants) 84 Volt for propulsion (Electric variant)**

Options (from new or upgrade)

Self recovery winch, RHD or LHD, optionally manned functionality including terrain detection and response, obstacle clearance/avoidance, path planning and motion behaviour control, ability to upgrade existing vehicles to electric or hybrid electric propulsion, integration of customer specific equipment

*Depending on variant

**Alternative voltages available

eATMP configured for optional manning

The data on this sheet is indicative and SC Innovation reserve the right to modify or upgrade in accordance with future technical developments without notice.